EL-6SILST

6-BOTTLE TOUCH SCREEN WINE COOLER

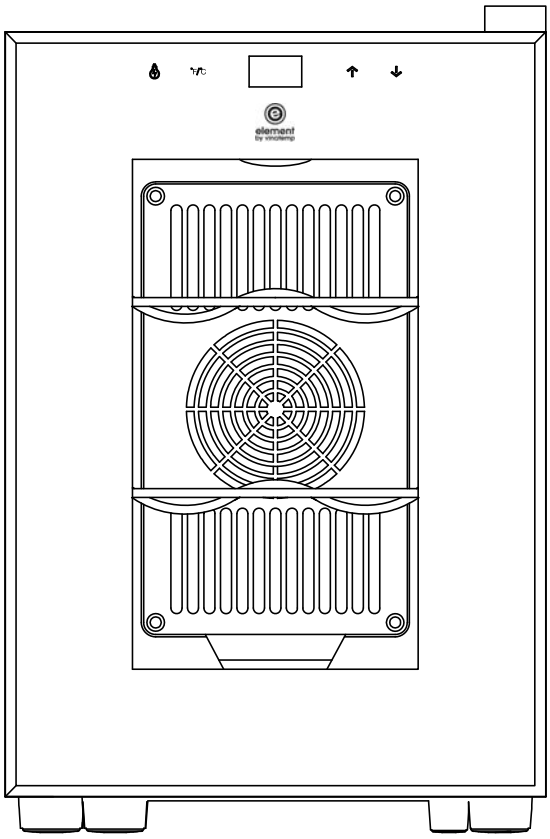

OWNER'S MANUAL

element by vinotemp

A PROUD HERITAGE OF EXPERIENCE & QUALITY

732 South Racetrack Road, Henderson, NV 89015 | 1.800.777.8466 | info@vinotemp.com | www.vinotemp.com

YOUR WINE COOLER

This unit can be used for storage and/or service. The unit has a glass door and soft interior light that you can use to display your wine.

SERVING WINES

Storing wines at the proper temperature is important. To preserve them as long as possible wine should be stored at approximately 55° Fahrenheit. However, the chart below suggests the optimal drinking temperature for the different styles of wine.

SERVING BEVERAGES

Storing beverages at the proper temperature is important. To preserve them as long as possible beverages should be stored at approximately 39° Fahrenheit. However, the chart below suggests the optimal drinking temperature for the different styles of beverages.

°C	°F	Wine Style	°C	°F	Beverage Style
19	66	Armagnac, Brandy, Cognac	12	53	Water
18	64	Full Bodied Red Wines, Shiraz	10	50	Black Ale
17	62	Tawny Port	8	46	Juice
15	59	Medium Bodied Red Wines	7	45	Sour Beers
14	57	Amontillado Sherry	7	45	Pale Ale
13	55	Light Bodied Red Wines	7	45	Dark Lagers
12	54	Full Bodied White Wines	6	43	Iced Coffee
11	52	Medium Bodied White Wines	5	42	Premium Lagers
10	50	Rosé, Light Bodied White Wines	4	40	Wheat Beers
9	48	Vintage Sparkling	3	38	Light, Pale Lagers
8	46	Fino Sherry	3	38	Coca-Cola
7	45	Non Vintage Sparkling	2	35	Dairy

A Proud Heritage of Experience & Quality

PRODUCT REGISTRATION

Purchase Confirmation

With the information you provide, we can confirm the date of purchase for your product. The confirmation is of benefit to you, especially if your original proof of purchase is lost.

Product Registration

Completing this product registration is the only way to guarantee you will be notified of substantive issues that arise concerning your product.

Become a Member of the Vinotemp® Family

Complete this product registration with your e-mail address and receive special offers and updates on new products via e-mail.

IMPORTANT:
Complete your product registration today!

Visit product and warranty registration at:
https://www.vinotemp.com/extended-warranty/register-warranty

For more information on warranty service and repair, please refer to the appropriate section of your product literature.

For additional information about Vinotemp product, visit www.vinotemp.com
or call toll-free 1-800-777-8466

Please also fill out the Questionnaire below for a chance to receive a FREE GIFT.

https://www.vinotemp.com/product-registration-form

For more information on Prop 65, go to:
https://www.vinotemp.com/prop65

GENERAL OPERATING INSTRUCTIONS

Remove all external and internal packaging from your appliance. Be sure that all parts have been included before discarding any packaging materials. You may want to keep the box and packing materials for use at a later date.

Upon receipt and inspection of unit, the supply cord must be replaced if it is damaged. Contact our customer service at 1-800-777-8466 or info@vinotemp.com.

Let the unit rest UNPLUGGED for 24 hours once you have it placed in your home.

READ ALL INSTRUCTIONS BEFORE USING THIS APPLIANCE
-Save these instructions-

To register your product, visit: http://www.vinotemp.com
Register your warranty within 10 days of receiving the unit.
Please be sure to retain your proof of purchase.

Protect Your Investment with an Extended Warranty!

New Leaf SERVICEPRO SERVICE PLANS
Essential consumer protection.

Add a New Leaf extended warranty to your order, and have the security of knowing that if there should be a problem, even years in the future, New Leaf will be there to assist! Usable for any Wine Cellar or other electronic device manufactured by Vinotemp. Add this warranty to purchases made from vinotemp.com or other qualified venders. Warranty must be registered within the first 10 days from original purchase.

Visit www.vinotemp.com to purchase.

TABLE OF CONTENTS

IMPORTANT SAFETY INSTRUCTIONS 6
ELECTRICAL CONNECTION 7
PARTS AND SPECIFICATIONS 8
INSTALLATION 9
OPERATING YOUR WINE COOLER 10-11
CARE AND MAINTENANCE 11
TROUBLESHOOTING 12
TERMS OF SALE AND WARRANTY 13
SERVICE & IMPORTANT NOTICE 20

IMPORTANT SAFETY INSTRUCTIONS

To reduce the risk of fire, electrical shock or injury when using your appliance, follow these basic precautions:

- Do not operate this or any other appliance with a damaged cord.
- Do not operate if housing is removed or damaged.
- Exercise caution and use reasonable supervision when appliance is used near children. Never allow children to operate, play with or crawl inside the appliance. Keep packing materials away from children.
- Before performing any maintenance or cleaning, ensure that the unit is unplugged or that the power line is disconnected.
- Do not clean appliance with flammable fluids. Do not store or use gasoline or other flammable vapors and liquids in the vicinity of this or any other appliance. The fumes can create a fire hazard or explosion.
- Exercise caution when moving and installing the unit. The cooler is heavy and may require two or more people when moving the unit to prevent strain or injury.
- To ensure proper ventilation for your appliance, the recommended clearance areas must be completely unobstructed. Choose a well-ventilated area with temperatures above 60 °F and below 90 °F.
- Locate the unit away from direct sunlight and sources of heat (stove, heater, radiator, etc.). This unit is intended for indoor use only and must be installed in an area protected from the elements.
- Place the appliance on a solid, level surface.
- Do not attempt to repair or replace any part of your appliance unless it is specifically recommended in this manual. All other servicing should be referred to a qualified technician.
- Connect to properly polarized outlets only. It is recommended that a separate circuit, serving only your appliance be provided. Use receptacles that cannot be turned off by a switch or pull chain. Be sure that the plug is fully inserted into the receptacle.
- To protect against electric shock, do not immerse appliance, plug or cord in water or other liquids. Avoid locating the unit in moist areas.
- This appliance is designed for freestanding installation only.
- Do not use this appliance for other than its intended purpose. For indoor, household use only.
- Do not operate the unit with wet hands, while standing on a wet surface or while standing in water.
- Do not use solvent-based cleaning agents or abrasives on the interior of the cooler. These cleaners may damage or discolor the interior.
- Keep fingers out of pinch point areas and be careful when closing doors if children are around.
- This appliance is designed for storing and cooling wines. Do not store perishable food or medical products within the unit. Do not store explosive substances such as aerosol cans with a flammable propellant in this appliance.
- When disposing of refrigerated appliances, special handling is often required. It is the consumer's responsibility to comply with federal and local regulations when disposing of this product.
- Do not slide your wine cooler into place.
- The instructions concerning persons (including children) with reduced physical, sensory or mental capabilities, or lack of experience and knowledge and children playing with the appliance are not required.
- **WARNING:** Risk of child entrapment and suffocation. Before you throw away this or an old unit, take off the door. Leave the shelves in place, so that children may not easily climb inside.

DANGER – RISK OF FIRE OR EXPLOSION. FLAMMABLE REFRIGERANT USED. TO BE REPAIRED ONLY BY TRAINED SERVICE PERSONNEL. DO NOT PUNCTURE REFRIGERANT TUBING.

ELECTRICAL CONNECTION

Improper use of the grounded plug can result in the risk of electrical shock. If the power cord is damaged, frayed or shows cracks or abrasions across its length, have it replaced at an authorized service center.

For your protection, this unit is equipped with a 3-conductor cord set that has a molded 3-prong grounding-type plug, and should be used in combination with a properly connected grounding-type outlet.

- Do not under any circumstances cut or remove the third ground prong from the power cord supplied. For personal safety, this appliance must be properly grounded.
- The cord should be secured behind the unit and not left exposed or dangling to prevent accidental injury.
- A standard electrical supply (115V AC only, 60Hz, 15A), properly grounded in accordance with the National Electrical Code and local codes and ordinances, is required.
- Never unplug the unit by pulling the power cord. To disconnect the appliance, always grip the plug firmly and pull straight out from the wall outlet. When moving the unit, be careful not to damage the power cord.
- The unit should always be plugged into its own individual electrical outlet with a voltage rating that matches the rating label on the unit.

Extension Cord

CAUTION: It is strongly recommended that you do not use an adapter or an extension cord with this unit.

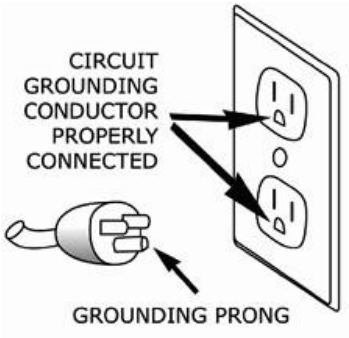

732 South Racetrack Road, Henderson, Nevada 89015 U.S.A.
1.800.777.8466 | info@vinotemp.com | www.vinotemp.com

PARTS AND SPECIFICATIONS

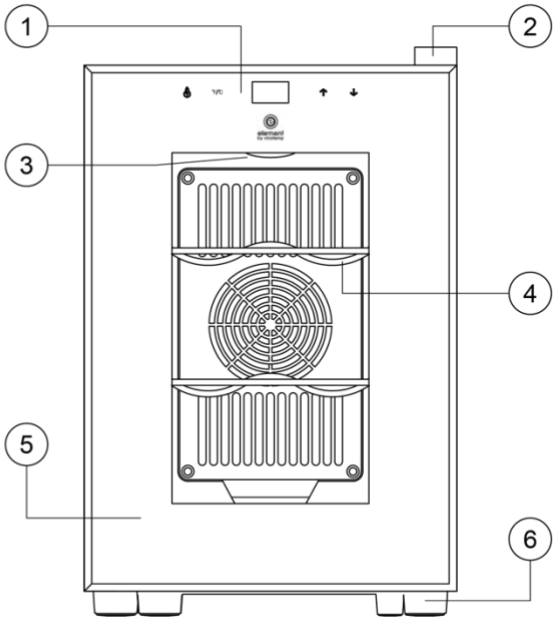

1. Control Panel
2. Door Hinge
3. Interior Light
4. Metal Wire Shelf
5. Glass Door
6. Foot

Model	EL-6SILST
Zone Type	1 Temp. Zone
Bottle Capacity	Approx. 6 bottles
Rated Voltage	110-120V AC
Rated Frequency	60Hz
Rated Power	60W
Ambient Temp Range	77°F (25°C)
Control Temp Range	46-65°F (8-18°C)
Cooling System	Heat-pipe cooling system
Power Consumption	0.438 kWh/24h
Net Weight	19.8 lbs. (9 kg)
Gross Weight	23.4 lbs. (10.6 kg)
Dimensions (W x D x H)	9 7/10 x 19 4/5 x 14 8/9 in.
Boxed Dimensions (W x D x H)	13 1/2 x 23 3/4 x 17 4/9 in.

*Note: This wine cooler is designed to store up to 6 standard Bordeaux 750 ml bottles. Storing large and/or oddly shaped bottles (including champagne and sparkling wine bottles) will decrease the capacity of your wine cooler.

INSTALLATION

- Remove all packing material before using your wine cooler.
- Check to be sure you have all of the parts and an owner's manual.
- **IMPORTANT**: Before connecting the unit to a power source, let it stand upright for approximately 24 hours. This will reduce the possibility of a malfunction in the cooling system from handling during transportation.
- Clean the interior surface with lukewarm water and a soft cloth.
- Place the wine cooler on a flat, dry surface that is strong enough to support it when it is fully loaded. Use the adjustable (iron case) to place the cellar fully horizontal.
- To level the wine cooler, adjust the front leveling legs at the bottom of the wine cooler.
- This unit is designed for freestanding installation only.
- This unit is not designed for installation in a garage, basement, or any other location where a controlled ambient environment between 50°F and 90°F cannot be maintained.
- Avoid placing the wine cooler near any source of heat or moisture, or in direct sunlight. Extreme hot and cold ambient temperatures may cause the unit not to perform properly or increased electrical consumption.
- Do not place the unit next to a major appliance that emits large amount of heat, such as dishwasher, microwave, oven, etc.
- Do not plug unit into the same outlet as a refrigerator or microwave.
- For freestanding installation, leave a minimum of 10-12 inches (25.4-30.4 cm) clearance on each side, 6 inches (15.2 cm) clearance at the back side, and unlimited clearance at the top of the wine cooler are suggested to ensure proper air circulation to cool the compressor and condenser.
- This unit is not designed to be installed under a counter, inside a cabinet, or in any location that does not allow the proper clearances on all sides.
- Do not place heavy articles on the top of the cellar.
- Do not slide the unit into place.
- Avoid locating the unit in moist areas.
- Plug the wine cooler into an exclusive, properly installed-grounded wall outlet.

OPERATING YOUR WINE COOLER

OPERATING INSTRUCTIONS

1. Gently place/slide the racks into the wine cooler.
2. Determine the best temperature setting to use.
3. Place bottles inside the wine cooler.
4. Plug the power cord into a standard grounded electrical outlet.
5. Limit the frequency of opening the door to conserve energy and maintain proper storage temperature.
6. Turn the interior light on and off by touching the button labeled with a light on the control panel.

Important: When using the wine cellar for the first time, please allow at least 24 hours for the internal temperature to adjust properly. Make sure at least three to five bottles are in the unit.

ELECTRIC PRINCIPLE DIAGRAM

Your wine cooler has a touch screen control panel on the upper part of the glass door.

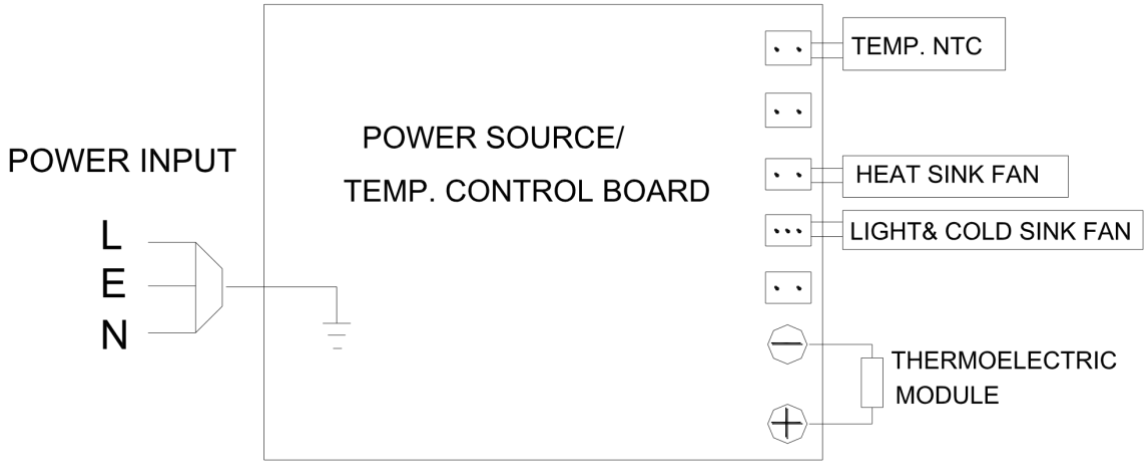

- The inside temperature of the thermoelectric wine cooler depends on the room temperature. The wine cooler can be adjusted in the range of 8°—18°C (± 1°C), when it is located in an ideal room temperature of 25°C.By first time turn on, without putting any bottle inside the wine cooler, the product can be cooled to 15°C after 1.5 hours and after 2~2.5 hours more will reach to the temperature programmed by the manufacturer.
- Your wine cooler has only one control for regulating the temperature. The temperature control is located on the upper right-hand corner of the compartment.
- To control the internal temperature, adjust the control knob according to the ambient temperature or purpose of use.
- The first time you turn the unit on, set the temperature control to “Max”.
- The range of the temperature control is from position “Min” to “Max”. After 2 hours, adjust the

temperature control to the setting that best suits your needs. To set middle should be appropriate for home or office wine cooler use.

- This wine cooler is provided with a LED light located on the undersurface of the temperature control box. You can turn the interior light ON or OFF by pressing the light switch.

NOTE: When using the unit for the first time or after a long period of inactivity, there may be a variance of a few degrees between the selected temperature and the temperature indicated on the LED readout. This is normal due to the length of inactivity, and will correct itself after the unit is run for a few hours. If the unit is unplugged, has lost power or is turned off, wait 3 to 5 minutes before restarting the unit. The unit will not restart before this time delay.

CARE AND MAINTENANCE

CLEANING YOUR WINE COOLER

- Turn off the power, unplug the appliance, and remove all items including shelves.
- Wash the inside surfaces with a warm water and baking soda solution. The solution should be about 2 tablespoons of baking soda to a quart of water.
- Wash the shelves with a mild detergent solution.
- Wring excess water out of the sponge or cloth before cleaning control panels or any electrical parts.
- Wash the outside cabinet with warm water and mild liquid detergent. Rinse well and wipe dry with a clean soft cloth.

IMPORTANT: Always unplug the unit before cleaning or performing maintenance. Never use harsh cleansers or scouring pads to clean any part of the unit.

POWER FAILURE

Most power failures are corrected within a few hours and should not affect the temperature of your appliance. If the power is off for an extended period of time, proper steps should be taken to protect your contents.

INACTIVITY

If the unit will not be used for a period of less than three weeks, leave the cooler operating. If the period of inactivity is several months, remove all items and turn the unit off. Clean and dry the interior thoroughly. Leave the door open slightly to prevent any possible moisture build-up.

MOVING YOUR WINE COOLER

- Always unplug the wine cooler before moving.
- Always remove all wine bottles before moving the wine cooler.
- Securely tape down any loose items, such as shelves, inside the unit.
- Turn the adjustable leg up to the base to avoid damage.
- Tape the door shut.
- Ensure that the unit stays securely in the upright position during transportation.
- Protect the outside of the appliance with a blanket or similar item.

ENERGY SAVING TIPS

- The unit should be located in the coolest area of the room away from heat sources or direct sunlight.
- Ensure that the unit has proper allowances on all sides for proper ventilation. Never cover any air vents.
- Only open the cooler door for as long as necessary. Frequent opening of the door will affect internal temperature.

PROBLEMS WITH YOUR WINE COOLER

You can solve many common wine cellar problems easily, saving you the cost of a possible service call. Try the suggestion below to see if you can solve the problem before contacting Vinotemp at Info@Vinotemp.com.

TROUBLESHOOTING

Symptoms	Possible Causes	Solutions
No cooling	• Plug not put in • Low voltage • Fuse broken	• Put in the plug • Ensure normal voltage • Change fuse
Not cold enough temperature inside	• The wine cooler is placed too near heat source. • Bad ventilation. • Fans don't work. • The door is not closed tightly or opened too frequently or for too long time.	• Keep the wine cooler away from sunshine or other heat source. • Place the wine cooler in the area with good ventilation and keep things away from the fans. • Check whether the plug is connected or change the fan. • Close the door tightly and don't open the door too frequently or for too long time.
Peculiar smell inside wine cooler	• Check whether there is any sour inside	• Wrap the source or take it out
Inside light flash	• Set temperature higher than inner temperature. • The automatic defrost function start to work.	• Adjust the adjuster • Normal function. No repair needed
Frost on the cold sink	• Too much humidity or too low temperature inside the case	• Output the plug, stop the power, and defrost by hand, Connect power again when the ice thaws

Terms of Sale

Cancellation or Fees Terms:
Shipping/Delivery fees are the responsibility of the Purchaser. Seller is not responsible for the carrier's missed/Non delivery for any reason. Delivery is curbside. Optional upgrades in delivery service is an additional fee. If upgraded delivery service cannot be performed properly, Purchaser agrees to accept delivery curbside and the difference in upgraded cost will not be refunded. If item with free shipping/freight is canceled in transit, a charge of 25% of the price of the unit/s plus freight costs both ways will be charged. All damages must be noted at time of delivery on BOL and Seller to be notified within 48 hours of delivery of such damage. Purchaser acknowledges if cancelation is authorized by Seller, a 35% restocking fee and freight both ways will be charged. No cancelation or refund on made-to- order products. If an order has been placed and production has not started, cancellation fee of 15% of total amount will be charged. Cancelled orders paid by Credit Card will have an additional fee of 3% deducted from the total refund. Once your order has shipped, the shipping address cannot be changed. Refurbished units are sold as is. Purchaser assumes risks to the quality and performance of goods and assumes the costs of all necessary service or repair not covered herein.

Defective Return and Exchanges:
Prior diagnosis and troubleshooting by Vinotemp Technical Service Team is required for a defective product exchange to occur, should all other repair remedies fail.
All defective return exchanges require a Return Authorization Number (RA) assigned by Vinotemp. Any unauthorized defective return to Vinotemp will be rejected at the time of attempted delivery. Return freight costs for defective product is covered by Vinotemp within the first 90 days from date of sale. For defective Return Authorizations issued after the 90th day from date of sale, the purchaser assumes responsibility for any related freight costs within the product warranty term. Purchaser responsible for any/all boxes, packaging materials, etc., to ensure return product is packaged correctly and fit for transit. Vinotemp is not liable for damages resulting from improper packaging or shipper mishandling. Vinotemp is authorized to reject any authorized defective returned product that arrives damaged.

Initials _____ **Accept Terms & Conditions Date** _____

Vinotemp International Corp. ("Seller") and the person or entity that acquires these goods from Seller ("Purchaser") hereby fully agrees to the following terms and conditions of the sale:

Shipping/Delivery fees are the responsibility of the Purchaser whether freight prepaid or freight collect. Seller assumes responsibility for the goods sold to the Purchaser until the goods have reached Purchaser's delivery address (FOB Destination) and the delivery receipt is signed clear. Seller is not responsible for the carrier's late delivery, missed delivery, unpaved roads, remote locations, stairs, elevators, narrow door openings and other such issues in attempting to fit or deliver the goods into the Purchaser's location. Delivery to remote locations may require additional fees. Remote location may be defined at the discretion of the carrier as more or less than 50 miles from the nearest major city. Purchaser assumes all responsibility for additional costs related to freight

732 South Racetrack Road, Henderson, Nevada 89015 U.S.A.
1.800.777.8466 | info@vinotemp.com | www.vinotemp.com

such as access, measurement, installation, hookup, wiring, moving and storage of the goods, flight of stairs, carrier's inability to safely and/or adequately deliver, inability to use the building elevator to lift the goods, narrow openings, along with any additional costs to deliver or redeliver the product properly. Make sure to review access to the property and size of the product ordered. The transportation of all goods is subject to the terms and conditions which the carrier imposes on Purchaser. Installation is the responsibility of the Purchaser. If white glove delivery was ordered and cannot be performed properly, or access is hindered in any way, Purchaser agrees to accept delivery curbside (delivery service cannot be refunded). If Purchaser will-calls or pays for their own freight responsibility transfers to the Purchaser when the Purchaser or Purchasers freight company picks up the unit from Seller. Freight quoted are either curbside, threshold or white glove. Standard white glove delivery is main floor, easy access and NO STAIRS, Doors, aligned feet attached (if necessary) and removal of packaging, additional fees for additional requests. Each service has a different rate and will require additional fees. If freight is not charged (Free Shipping or Freight Included) and the order is cancelled after shipping, a freight charge of 25% of the cost of the unit, each direction will be charged. Item swap outs are arranged as curbside delivery and pickup unless noted otherwise. There is no white glove service for returns. Approved returns must have original and/or proper packaging. Swap-outs (Delivery and Pick up are at the same time) Original unit must be packed and ready for carrier pick up at time of delivery of new unit. Packaging of old unit must be adequate for shipping, not oversized or on a pallet if unit was not originally delivered on a pallet. Carrier will not drop off new unit if the original unit is not ready. If the carrier has to make a second attempt, customer will be subject to additional charges for the attempted delivery and for any packaging issues. Deliveries include ONE attempt by the shipping company to deliver the product to the consumer. If for any reason the customer is unavailable to accept the order and the product is undeliverable under any circumstances, the customer will be responsible for any extra shipping and handling charges. We are a manufacturer not a shipping company, deliveries are done by a 3rd party service. Email us at info@vinotemp.com for a quote or any additional information. Freight discussed is Continental USA (excluding Alaska, Puerto Rico, Hawaii), cost is additional please email info@vinotemp.com for a quote.

If you use a service repair company without approval or parts not supplied by Vinotemp and your unit under warranty fails to work, we will repair your item provided you ship your unit prepaid to and from our facility in Henderson. Vinotemp is not responsible for install or removal costs or unauthorized repairs. If the repair or unauthorized part damaged the unit, we will provide customer a cost to repair that damage.

California Proposition 65 Warning: The products sold on this ecommerce website and to the public may contain chemicals and other substances known to the State of California to cause cancer and birth defects and other reproductive harm.

Totes made of vinyl, imitation leather, and/or leather material contain lead and/or other substances that are known to the State of California to cause cancer, birth defects and other reproductive harm.

Microfiber "Plastic microfiber" means a small synthetic particle that is fibrous in shape, less than 5 millimeters in length, and is released into water through the regular washing of textiles made from synthetic material.

Composite wood: May contain formaldehyde.

Galvanized metal and some of its constituents contain lead and/or other substances that are known to the State of California to cause cancer, birth defects and other reproductive harm.

Products made of vinyl contain lead, Diethyl Hexyl Phthalate (DEHP), and/or other substances that are known to the State of California to cause cancer, birth defects and other reproductive harm.

Acrylic may contain Acrylic Acid and/or other substances that are known to the State of California to cause cancer, birth defects, and other reproductive harm.

Appliances may contain tin or lead in either the paint or the controllers, and/or other substances that are known to the State of California to cause cancer, birth defects, and other reproductive harm.

Our barware items may contain plastic, acrylic, enamel, crystal, metal and/or other substances that are known to the State of California to cause cancer, birth defects, and other reproductive harm.

Appliances may contain Tin, Lead or Nickel.

Damage: All damages must be noted at time of delivery. If a bill is signed that there is no damage, buyer accepts delivery as free and clear. Any claim for damages of the goods, when FOB Destination, that incurred during shipment by the carrier are insured and handled directly with the carrier by the Seller if noted on the receipt and notified within 48 hours of delivery.

OPEN AND INSPECT YOUR DELIVERY. When FOB Destination, if the item is damaged by the freight company, and Purchaser cancels rather than accepts a replacement, the order can be cancelled by paying for freight costs both ways and a 35% restocking fee for stocked items. No cancellation or refunds on custom/made or made to order products. When shipped 3rd Party (FOB Warehouse), Purchaser assumes all responsibility for delivery, payment of freight and freight claims for damages during shipment. Manufacture defects will be handled directly with Seller, subject to the limited warranty below.

Fees: All sales are final. Unless authorized in writing by the Seller, Purchaser may not return the goods under any circumstance. If Seller agrees in writing to take back stocked goods, there will be a restocking/service fee that is 35% of the purchase price of the goods and freight both ways (product must be new, unused, and in original packaging). If Purchaser returns goods claiming that the goods are defective and goods are found to be in working condition by the Seller, Purchaser is liable for the cost of freight both ways plus and a service fee that is 35% of the purchase price of the goods. Built to Order and Custom products are nonreturnable, nonrefundable. Purchaser must notify Seller of nonconforming goods within 48 hours of receipt, after which time all goods are deemed accepted by the Purchaser. If an order has been placed and production has not started, cancellation of your order will be a 15% charge. If Purchaser tenders payment with a check that has insufficient funds (NSF), a collection fee plus NSF fee of $50 will be added to the invoice, which Purchaser agrees to pay promptly. If Purchaser puts a stop payment on a check or credit card for any reason, Purchaser agrees to pay for all costs associated with the Seller's collection or litigation of such a claim, including, without limitation, general and special damages, court costs and attorneys' fees. Finance charges begin the date of invoice. Title to the goods reverts back to the Seller in the case of nonpayment of goods or services. All fees and costs to retrieve the product, cost of freight, legal costs, collection fees and court fees, credit card fees and interest rate of 18% (annual rate) will be the responsibility of the Purchaser. In a credit card dispute, Purchaser assumes and must immediately pay any "credit card arbitration" fees and chargeback fees which the credit card companies charge at the time of the chargeback. Cancelled orders using a Credit Card will have an additional fee of 3% deducted from the refund. Any disputes not resolved within 30 days from the invoice date will be reported to credit reporting agencies.

LIMITED WARRANTY: Seller warrants that the goods will be free of defects in materials and workmanship as follows:

Furniture style (wood) wine cabinets made in the U.S.: all cooling unit parts only for a period of 1 (year) year; cabinetry and labor (uninstalled) for a period of 12 (twelve) Months (Model numbers “Vino” and “Custom”.

Metal cabinet units (appliances) (compressor) (made in China and Denmark)(Model numbers start with EL, VT, IL, or EP: parts and labor for cooling system and cabinetry for a period of 12 (twelve) months.

Thermoelectric Units: 90 (ninety) days (including Wine and Beverage Coolers, Beer Dispensers, Humidor, Portofino Wood Cellars, and Refrigerators). (Models start with EL, VT, IL or EP). WineMate and Cellar Tec (WM, Wine Mate or CT)(Wine Cooling Units) Split and Ducted Systems and other installed cooling units are parts only for 1 year, no labor. Self Contained WineMate Cooling Systems are 1 year parts, 1 year labor. Removal and reinstallation of cooling units is not included.

Wine Accessories, Racking Systems, Parts and Other miscellaneous items is a 30 day warranty.

Il Romanzo units: Warranty 90 (ninety) days. Replacement part 12 (twelve) months from the date of sale.

Brama: 1 year warranty from date of purchase.

Non-New Units (Scratch & Dent/Refurbished/Floor Models), warranty for compressor units is 90 days from your dated invoice and 30 days for thermoelectric units (parts for function only, not cosmetic defects). These units are refurbished and sold as is; Purchaser assumes risks to the quality and performance of goods and assumes the costs of all necessary service or repair not covered herein. Extended warranties via New Leaf may not be purchased on Non-New Units. Delivery is curbside. Upgrades in delivery will require an additional fee.

Element Grills (via Element Products LLC), grills have a thirty day limited parts warranty on grill accessories.

If a model is not listed here will have 90 day warranty on parts only if it’s a new item.

Parts and Repairs: Warranty on in-house repairs: 90 days parts and labor for compressor; 30 days parts and labor for Thermoelectric; Customer is required to put down a labor deposit of $75 for Thermoelectric units; $150 for compressor based Wine Coolers and $195 for WineMate units which will be kept if a unit is found to be in good working condition. Customer is responsible for freight costs to us.

Warranty on parts purchased: 30 days; if part fails within 30 days of purchase, customer is to ship us back the part; upon inspection, if defective, VT will send replacement part at no charge. If a purchaser claims a product is “defective” with regards to refrigeration, Purchaser must obtain a letter from a qualified refrigeration technician at the Purchaser’s cost to verify that the unit was installed properly, with proper ventilation and the unit is truly malfunctioning due to a manufacturing defect.

Removal or reinstallation of a unit is not included in warranted costs. Purchaser’s exclusive remedy is limited at Seller’s option to repair or replace defective part[s] with either new or reconditioned part[s]. Purchaser is responsible for shipping the unit prepaid to a designated facility and Seller will

pay return shipping charges in the continental United States for items repaired under warranty within 12 (twelve) months from date of sale. The returned unit must be packaged correctly, with enough protection to ensure the unit is not further damaged. Oversized or lack of packaging is not permitted and will be refused. Replacement or exchanged units will be returned to Purchaser through curbside delivery only. Any redelivery fees are the Purchasers responsibility. Since the natural variation in texture, density, grain, color, tone, and shade of wood is unavoidable; Seller does not guarantee the texture, color, tone, or shade of the wood: nor does seller guarantee the colorfastness of wood or against peeling, chipping, cracking, or scratching. Note: Unfinished wood is subject to warping; all wood surfaces must be sealed before placing cellar into service. Make sure doors are aligned by reviewing the owner's manual. Improper repair or placement of the unit will void the warranty. Any third party repair facility must be preapproved in writing by Seller, before providing replacement parts under warranty. Change Orders: Custom units already in production that require a change will be subject to a change order fee.

Storage Fees: When having an item serviced by a Vinotemp service technician at the Vinotemp facility, Purchaser agrees to pick up their repaired item or make arrangements for return shipping within a 30 day period once they have been notified by Vinotemp through phone call, email, or letter that their unit is ready for pick up. If the item remains in the Vinotemp warehouse after 30 days but no longer than 60 days, the Purchaser will incur additional storage fees of 2%. After 60 days in storage, the item will become property of Vinotemp. For custom units with deposits: If product is not picked up or shipped within 60 days of completion, Purchaser deposit is forfeited and product becomes the property of Vinotemp. Warranty period is from the date of sale (not from shipping, delivery, nor installation). All completed cabinetry, racking, or other custom work must be picked up or shipped within a period of 14 days after Vinotemp has notified the Purchaser by phone call, email, or letter. Any completed cabinetry, racking, or other custom work stored longer than 14 days will incur an additional monthly storage fee. After 60 days, the product will become property of Vinotemp.

This Limited Warranty does not cover damage due to such things as accident, misuse, abuse, mishandling, neglect, acts of God, fires, earthquakes, floods, high winds, government, war, riot or labor trouble, strikes, lockouts, delay of carrier, unauthorized repair, or any other cause beyond the control of the Seller, whether similar or dissimilar to the foregoing. Seller is not responsible for any damages caused to Purchaser's property resulting from the goods. This limited warranty applies only inside the Continental US (Alaska, Puerto Rico, Hawaii and other territories/countries are not warranted). Purchaser understands and acknowledges that the goods sold here are wine cellars, cigar humidors, and/or other similar units which house wine or cigars or other items. Purchaser assumes all risk of using these units, including risk of spoilage, humidity variations, temperature variations, leaks, fire, water damage, mold, mildew, dryness and similar and any other perils that might occur. Seller is not responsible for incidental or consequential damages, and there are no warranties, expressed or implied, which extend beyond the Limited Warranty described above. Warranty and liability are nontransferable. The implied warranties of merchantability and of fitness for a particular purpose are hereby expressly disclaimed. Some states do not allow the exclusion of incidental or consequential damages, or a waiver of the implied warranties of fitness and/or merchantability, so the above limitations may not apply to you. This warranty gives you specific legal rights and you may also have other rights which vary from state to state. Seller disclaims any indemnification for claims of infringement of any intellectual property of protectable nature. In the event of any dispute between Seller and Purchaser arising out of or relating to these terms and conditions or to the goods sold generally, Purchaser must first file a written claim with Seller within

ten days of the occurrence giving rise to the claim and wait an additional thirty days for a response before initiating any legal action. The sale and all terms are subject to Nevada law. Any legal proceeding arising out of or relating to these terms and conditions or to the goods sold Purchaser shall bring, solely and exclusively in Clark County. In no event may Purchaser initiate any legal proceeding more than six months after the occurrence of the event giving rise to the dispute. Seller may make nonpayment claims until debt is paid in full. Any dispute or claim relating in any way to these to the Terms and Conditions, the Website, or any products or services sold or distributed by or through this Website, store, or catalog will be resolved by binding arbitration, rather than in court, except that you may assert claims in small claims court if your claims qualify. The Federal Arbitration Act and federal arbitration law apply to the Terms and Conditions. We each agree that any dispute resolution proceedings will be conducted only on an individual basis and not in a class, consolidated or representative action. If for any reason a claim proceeds in court rather than in arbitration we each waive any right to a jury trial. Both parties agree to bring suit in court to enjoin infringement or other misuse of intellectual property rights.

The above terms and conditions are the only ones governing this transaction and Seller makes no oral representations of any kind. These Terms and Conditions can only be modified in writing, signed by both Purchaser and Seller.

SPECIFIC WARRANTY BELOW for SCRATCH & DENT/OPEN BOX/ REFURBISHED/FLOOR MODELS/ CLOSEOUTS, OVERSTOCK: TERMS AND CONDITIONS OF SALE

Vinotemp (and its brands Element, Wine Mate, Cellar Tec, Apex Wine Racks, Epicureanist Il Romanzo, Brama("Seller") and the person of the entity that acquires these goods from Seller ("Purchaser") hereby fully aggress to the following terms and conditions of the sale:

1. Freight: Vinotemp is not a freight, moving or installation company, if Freight is arranged for the Buyer, the Seller assumes no responsibility for the goods sold to the Purchaser once the goods have left the Seller's premises, including, but not limited to, late delivery by the moving carrier, or for events caused by any difficulty carrier incurs in attempting to fit the goods into the Purchaser's place of business or residence due to the size of the goods or otherwise, such as the disassembly and reassembly of the goods. Purchaser assumes all responsibility for delivery, payment of freight, extra fees, access, measurement, installation, hook-up, moving and storage of the goods. The transportation of all goods is subject to the terms and conditions which the moving carrier imposes on Purchaser including, but not limited to, additional charges imposed per flight of stairs, and/or additional charges resulting from the carrier's inability to safely and/or adequately use the building elevator to lift the goods to an upper floor. Any claim for damages incurred during shipment by the carrier of the goods are insured and handled directly with the carrier and must be noted at time of delivery.

2. All sales are final, and unless authorized in writing by the Seller, Purchaser is not entitled to return goods, under any circumstances. If Purchaser refuses to accept goods, the Purchaser is liable for the return and cost of freight both directions and a restocking/service fee that is 35% of the purchase price of the goods. Purchaser must notify Seller of non-conforming goods within four days of delivery, after which time all goods are deemed accepted.

3. If Purchaser tenders payment with a check that has insufficient funds (NSF), or stops payment on a check or credit card for any reason, Purchaser agrees to pay for all costs associated with the Seller's connection or litigation of such a claim, including without limitation extra damages, court costs, collection fees and attorney's fees. Finance charges begin the date of invoice. Collection fees plus NSF fee of $50 will be added to your invoice, which you agree to promptly pay. Title to the goods does not pass until payment is received in full by Seller and Seller retains a security interest in the goods until they are paid for in full. If the credit card dispute goes to arbitration, Buyer agrees to pay for credit card arbitration fees.

4. LIMITED WARRANTY on Non-New Units (Scratch & Dent/Refurbished and Floor Models): warranty for compressor units is 90 days from your dated invoice and 30 days for thermoelectric units (parts for function only, not cosmetic defects). These units are refurbished and sold as is; Purchaser assumes risks to the quality and performance of goods and assumes the costs of all necessary service or repair not covered herein. Wine Accessories, Racking Systems and other items not mentioned are not warranted. There is no warranty on parts purchased separately. Removal and re-installation of unit is not included in warranted labor. Purchaser's exclusive remedy is limited, at Seller's option; to repair or replace defective part[s] with either new or factory reconditioned part[s]. Purchaser is responsible for shipping the unit pre-paid to designated facility and Seller will pay return shipping charges in the continental United States for items repaired under warranty. Since the natural variation in texture, density, grain, color, tone and shade of wood is unavoidable; Seller does not guarantee the texture, color, tone or shade of the wood: nor does seller guarantee the colorfastness of wood or against peeling, chipping, cracking or scratching. Note: Unfinished wood is subject to warping; all wood surfaces must be sealed before placing cellar into service. Improper placement of the unit will void the warranty. By Vinotemp in writing, any 3rd party repair facility must be pre-approved before providing parts free of charge.

5. Freight: If As-Is unit is shipped including freight and delivery is denied, customer is responsible for freight to and from buyer. Other costs Buyer is responsible for is storage, repackaging, and attempted delivery fees.

6. Vinotemp does not cover damage due to such things as accident, misuse, abuse, mishandling, neglect, acts of God, fires, earthquakes, floods, high winds, government, war, riot or labor trouble, strikes, lockouts, delay of carrier, unauthorized repair, or any other cause beyond the control of the Seller, whether similar or dissimilar to the foregoing. Seller is not responsible for any damages caused to Purchaser's property resulting from the good. This limited warranty applies only inside the Continental US. (Alaska, Puerto Rico and Hawaii are not warranted.)

7. Purchaser understands and acknowledges that the goods sold here are wine coolers, appliances, cigar humidors, and/or other similar units which may house wine or cigars or other consumables. Purchaser assumes all risk of using these units, including risk of spoilage, humidity variations, temperature variations, leaks, fire, water damage, mold, mildew, dryness and similar perils that might occur.

8. UNLESS OTHERWISE PROVIDED BY APPLICABLE LAW, SELLER IS NOT RESPONSIBLE FOR INCIDENTAL OR CONSEQUENTIAL DAMAGES, AND THERE ARE NO WARRANTIES, EXPRESS OR IMPLIED, WHICH EXTEND BEYOND THE DESCRIPTION ON THE FACE HEREOF; WARRANTY AND LIABILITY ARE NON-TRANSFERABLE. THE IMPLIED WARRANTIES OF MERCHANTABILITY AND OF FITNESS FOR A PARTICULAR PURPOSE ARE HEREBY EXPRESSLY DISCLAIMED. SELLER DISCLAIMS ANY INDEMNIFICATION FOR CLAIMS OF INFRINGEMENT OF ANY INTELLECTUAL PROPERTY OF PROTECTABLE NATURE.

9. In the event of any dispute between Seller and Purchaser arising out of or relating to these terms and conditions or to the goods sold generally, Purchaser must first file a written claim with Seller within thirty days of the occurrence giving arise to the claim and wait an additional thirty days for a response before initiating any legal action. Any legal proceeding arising out of or relating to these terms and conditions or to the goods sold generally shall be brought solely in Clark County. The prevailing party in any such proceeding is entitled to its attorney's fees and costs. In no event may Purchaser initiate any legal proceeding more than six months after the occurrence of the event giving rise to the dispute.

10. **Delivery is curbside. Upgrades in delivery will require an additional fee.**

The above terms and conditions are the only ones governing this transaction and Seller makes no oral representations of any kind. These Terms and Conditions can only be modified in writing, signed by both Purchaser and Seller. 03/18/2021

SERVICE & IMPORTANT NOTICE

Upon receipt and inspection of unit, the supply cord must be replaced if it is damaged. Contact our customer service at 1-800-777-8466 or info@vinotemp.com.

The manufacturer has a policy of continuous improvement on its products and reserves the right to change materials and specifications without notice.

WARNING:
Please do not place the unit within reach of children.
For adult use only.

Contact **info@vinotemp.com** with any questions or visit
www.vinotemp.com

732 S. Racetrack Road
Henderson, NV 89015
www.vinotemp.com

Vinotemp is a registered trademark of Vinotemp International. All products, features, and services are subject to change without notice. We cannot guarantee the accuracy of the contents of this document. We disclaim liability for errors, omissions, or future changes.

© 2021 Vinotemp International. All rights reserved.